# Assembly instructions

SIEGENIA®
brings spaces to life

# AERO

## Ventilation control unit

Window systems

Door systems

Comfort systems

## Table of contents

# 1 About this documentation

## 1.1 Original operating instructions

These instructions are part of the original operating instructions. The operating instructions consist of the following sections:

- assembly instructions
- operating and service instructions

## 1.2 Read the instructions

These instructions are an important document and part of the product. Only the defined procedures are safe. Persons can be injured or material damage could occur if these instructions are not observed.

Read and observe the instructions completely prior to the installation of the product.

## 1.3 Producer

SIEGENIA-AUBI KG
Industriestraße 1 – 3
57234 Wilnsdorf
Germany

You can find the addresses of
our worldwide locations here:
https://www.siegenia.com/en/company/locations

## 1.4 Notice on gender

The linguistic form used serves for easier readability and always means all genders as long as nothing else is explicitly mentioned.

## 1.5 Target group

This information is intended for producers of construction elements, fitters and retrofitters.

Producers of construction elements comprise all persons who carry out the following activities:

- Fabricate SIEGENIA products in window elements or door elements

The target group "fitters and retrofitters" comprises all persons who carry out the following activities:

- SIEGENIA install and repair products in a building project
- install and repair window elements or door elements that are equipped with SIEGENIA products in a building project
- retrofit window elements or door elements with SIEGENIA products

## 1.6 Other relevant information

Note the following other relevant information prior to installation.

- Operating and service instructions for ventilation control unit

link.si/td/sens001/0224

# 2 Safety

## 2.1 Designated use

- The ventilation control is an external, wired control unit for SIEGENIA ventilation systems with SI-BUS.
- The ventilation control unit can be coupled with a single ventilation unit (if the control panel for the ventilation unit is out of reach, for example) or can be used for the synchronised control of up to 9 ventilation units simultaneously.
- The ventilation control unit is suitable for installation on the wall or on a flush-mounted box.
- The installation location for the ventilation control unit must satisfy the following requirements:
  - Free from draughts (close to windows or doors, for example)
  - Not directly next to a heat source
  - Shielded from direct sunlight
  - Not in a recess (between items of furniture, for example)
  - Recommended installation height: 1.40 – 1.60 m

## 2.2 Requirements for the target groups

We assume and require that manufacturers of building elements possess the following knowledge and skills:

- knowledge of the regulations concerning occupational safety and accident prevention
- comprehension of technical correlations according to state-of-the-art science and technology
- knowledge of professional work steps
- knowledge of the applicable standards and directives
- knowledge of applicable testing regulations
- knowledge and skills with regard to the professional fixing of technical elements
- knowledge of the requirements of profile system providers

SIEGENIA offers training courses for the acquisition of some of the required knowledge and skills. Contact your SIEGENIA sales consultant in case of requirement.

We assume and require that fitters and retrofitters possess the following knowledge and skills:

- knowledge of the regulations concerning occupational safety and accident prevention
- comprehension of technical correlations according to state-of-the-art science and technology
- knowledge of professional work steps
- knowledge of the applicable standards and directives
- knowledge and skills with regard to the professional use of electrical and mechanical tooling
- knowledge and skills with regard to the professional fixing of technical elements
- knowledge and skills with regard to the professional fabrication of electrical components
- knowledge and skills with regard to the work steps:
  - connecting electrical components
  - commissioning electrical components
  - checking the function of electrical components
- knowledge of the 5 safety rules:
  - enable
  - secure against reactivation
  - ensure that system is voltage-free
  - earthing and short-circuiting
  - cover or isolate proximate live parts

SIEGENIA offers training courses for the acquisition of some of the required knowledge and skills. Contact your SIEGENIA sales consultant in case of requirement.

## 2.3 Safety notes

**Risk of explosion due to electrical sparks**

When operating the product in environments with an explosive atmosphere, electrical sparks may cause an explosion. Explosive atmospheres are created, for example, by flammable liquids, steam, gas or dust.

- Do not use the product in environments with an explosive atmosphere.

**Risk of injury from using unsuitable components**

Components, accessories and spare parts which do not comply with SIEGENIA requirements can impair the safety of the product and lead to accidents.

- Use original parts or components that comply with the SIEGENIA requirements. If in doubt, contact SIEGENIA for confirmation.

# 3 Product specifications

## 3.1 Scope of delivery

### 3.1.1 Ventilation control unit

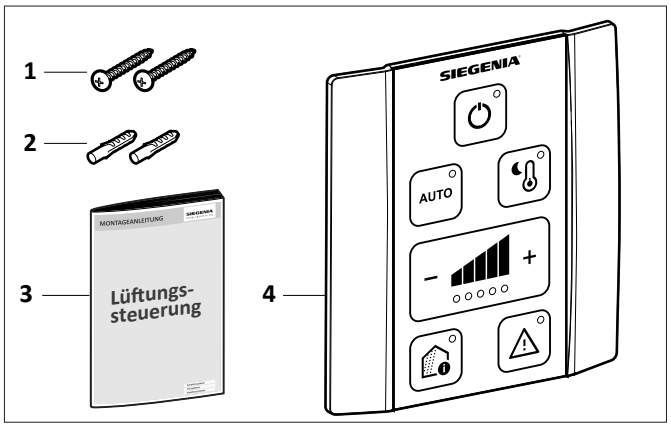


| Item | Name | Quantity |
|---|---|---|
| 1 | Screw Ø 3.5x35 | 2 |
| 2 | Dowel Ø 6 | 2 |
| 3 | Assembly instructions | 1 |
| 4 | Ventilation control unit (consisting of base plate and upper part of the device) | 1 |

### 3.1.2 Required components

The listed components are required to establish the function.

| Variant 1: connection with AEROPLUS WRG | | | | | | | | | | |
|---|---|---|---|---|---|---|---|---|---|---|
| Name | Quantity of AEROPLUS WRG | | | | | | | | | Material number |
| | 1 | 2 | 3 | 4 | 5 | 6 | 7 | 8 | 9 | |
| Connection cable (L = 1 m) | 1 | 3 | 5 | 7 | 9 | 11 | 13 | 15 | 17 | 3513121 |
| Connection cable (L = 2 m) | | | | | | | | | | GAPC0030-000010 |
| Connection cable (L = 5 m) | | | | | | | | | | GAPC0040-000010 |
| Y-adapter cable (L = 0.1 m) | – | 1 | 2 | 3 | 4 | 5 | 6 | 7 | 8 | GAPC0060-000010 |
| Extension cable (L = 2 m) | if required | | | | | | | | | 3513123 |

| Variant 2: connection with AEROMAT VT | | | | | | | | | | |
|---|---|---|---|---|---|---|---|---|---|---|
| Name | Quantity of AEROMAT VT | | | | | | | | | Material number |
| | 1 | 2 | 3 | 4 | 5 | 6 | 7 | 8 | 9 | |
| Connection cable (L = 1 m) | – | 1 | 2 | 3 | 4 | 5 | 6 | 7 | 8 | 3513121 |
| Connection cable (L = 2 m) | | | | | | | | | | GAPC0030-000010 |
| Connection cable (L = 5 m) | | | | | | | | | | GAPC0040-000010 |
| Y-adapter cable (L = 0.1 m) | – | 1 | 2 | 3 | 4 | 5 | 6 | 7 | 8 | GAPC0060-000010 |
| Extension cable (L = 2 m) | if required | | | | | | | | | 3513123 |

## 3.2 Operating element

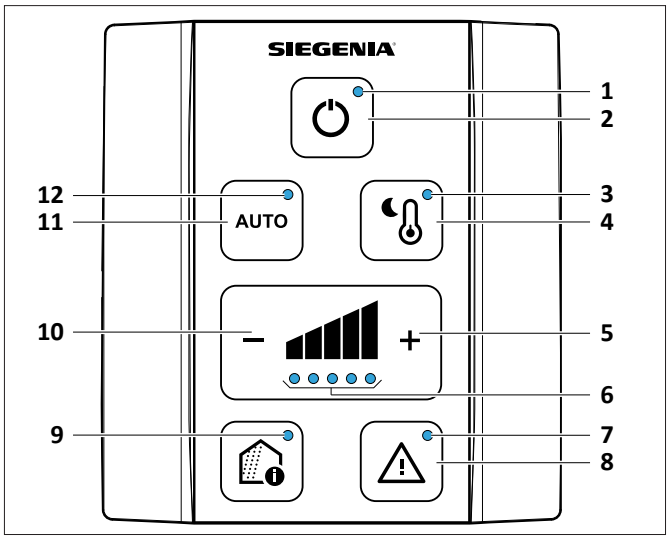


| Item | Name | Purpose |
|---|---|---|
| 1 | Status LED | • Lights up white when the coupled ventilation units are switched on. |
| 2 | ON/OFF button | • Switches the coupled ventilation units on and off. |
| 3 | Night ventilation LED | • Lights up white when night ventilation is active. |
| 4 | Night ventilation button | • Activates and deactivates night ventilation.<br>• If automatic mode is active, automatic mode is deactivated when night ventilation is activated. |
| 5 | Increase ventilation level button | • Increases the ventilation level in steps from 1 to 5. |
| 6 | Ventilation level LEDs | • Light up white depending on which ventilation level is active. |
| 7 | Warning LED | • Lights up or flashes yellow or red when there is an error.<br>• Lights up yellow when the filter needs replacing. |
| 8 | Warning button | • Acknowledges the errors messages shown.<br>• Press and hold to acknowledge the filter replacement indicator. |
| 9 | Air quality LED | • Lights up green, yellow or red to indicate the air quality level. |
| 10 | Reduce ventilation level button | • Reduces the ventilation level in steps from 5 to 1. |
| 11 | AUTO button | • Activates and deactivates automatic mode.<br>• If night ventilation is active, night ventilation is deactivated when automatic mode is activated. |
| 12 | AUTO LED | • Lights up white when automatic mode is active. |

## 3.3 Operation

**Example: ventilation control unit with 3 AEROPLUS WRG**

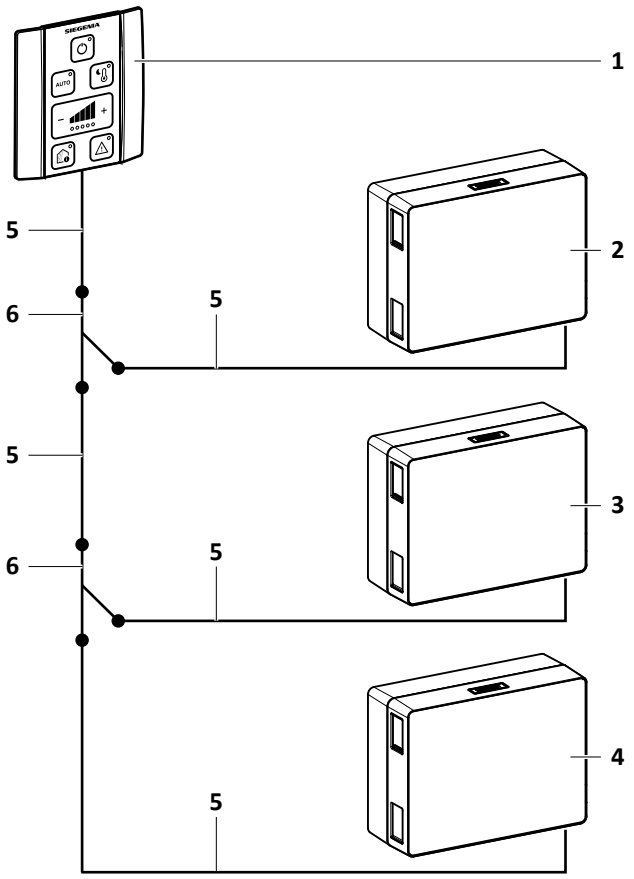


| Item | Name |
|---|---|
| 1 | Ventilation control unit |
| 2 | Master |
| 3 | Slave 1 |
| 4 | Slave 2 |
| 5 | Connection cable (with extension cable if required) |
| 6 | Y-adapter cable |

The ventilation control unit can be coupled with between 1 and 9 ventilation units via the SI-BUS. If there is more than one ventilation unit in the bus system, the connected ventilation units follow a master-slave hierarchy. The master is always the ventilation unit from whose menu the coupling was carried out. All other ventilation units are slaves. It is possible to couple different types of ventilation units.

## 3.4 Ventilation control unit dimensions

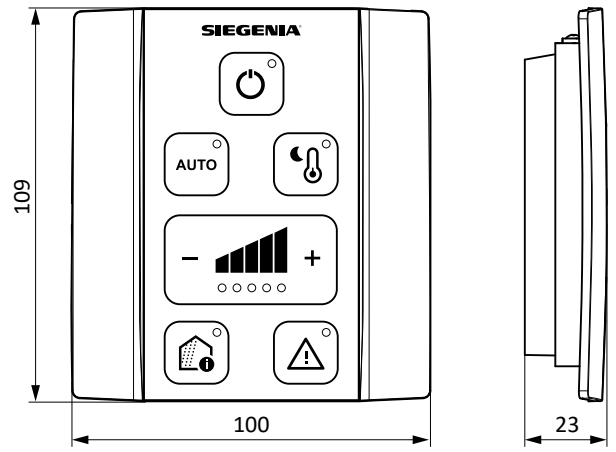


Measurements in mm

## 3.5 Technical specifications

| | Ventilation control unit | Ventilation control unit sensors |
|---|---|---|
| Power consumption | 0.6 W | 0.8 W |
| SI-BUS nominal voltage | 24 V DC (+5 %, -10 %) | 24 V DC (+5 %, -10 %) |
| Protection class | IP20 | IP20 |
| Ambient temperature | -20 – +70 °C | -20 – +70 °C |
| Ambient air humidity | max. 85%, non-condensing | max. 85%, non-condensing |
| Permissible operating temperature of sensors | – | 0 – 50 °C |

# 4 Assembly

## 4.1 Tools and work equipment

| Tools | |
|---|---|
| | Drill |
| | Drill Ø 6 mm |
| | Spirit level |
| | Screwdriver |

| Work equipment | | Intended use |
|---|---|---|
| | Dowels | Depending on the condition of the wall, replace the enclosed dowels with suitable fasteners provided by the customer. |
| | Device screws | Use 2 device screws for installation on the flush-mounted box if there are no screws provided with the flush-mounted box. |

## 4.2 Installing the ventilation control unit on the wall

1. Loosen the screw and remove the upper part of the device from the base plate.

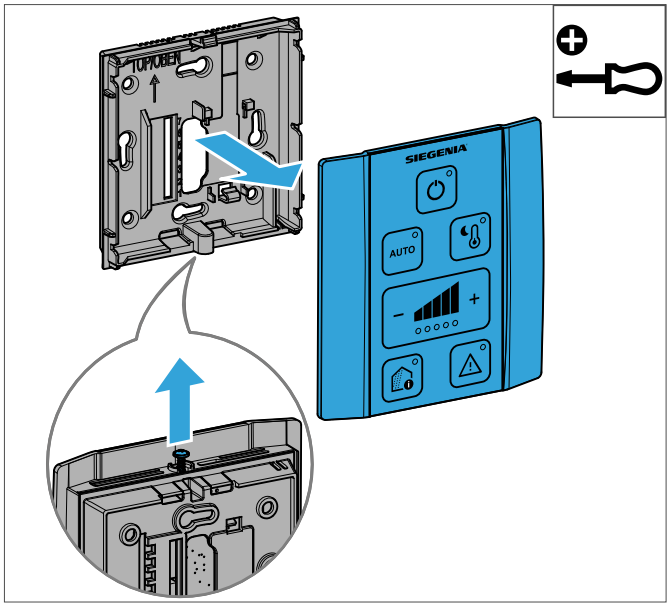


2. Adjust the base plate and mark the fixing holes.

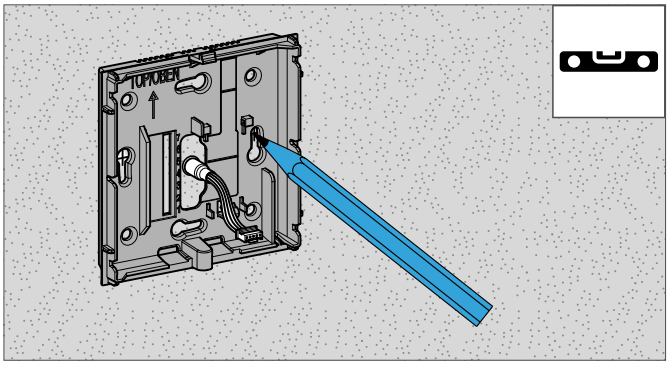


3. Drill the fixing holes and insert dowels.

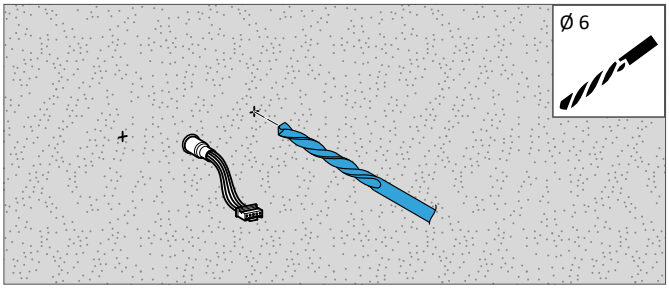

4. Feed the SI BUS cable through the central hole in the base plate.

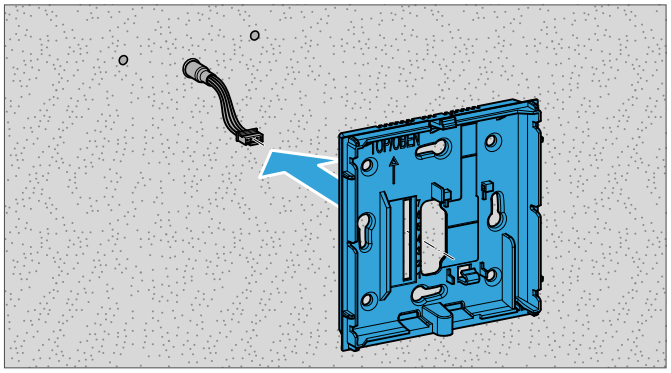


5. Screw the base plate into place.

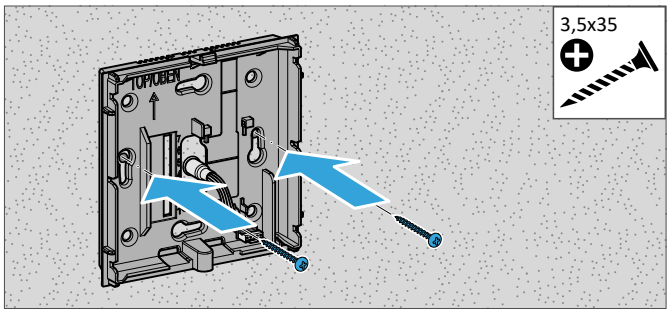


6. Connect the SI BUS cable to the corresponding bushing on the back of the upper part of the device.

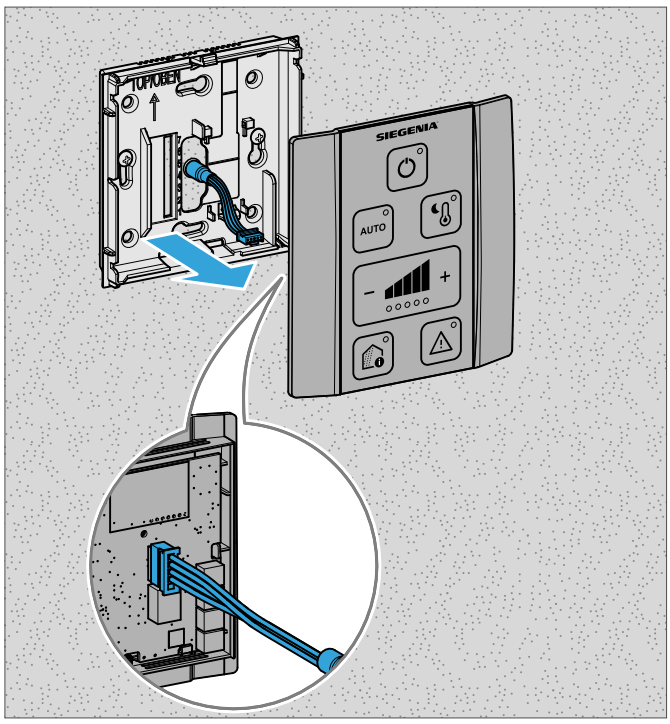


7. Fasten the upper part of the device to the base plate using the screw.

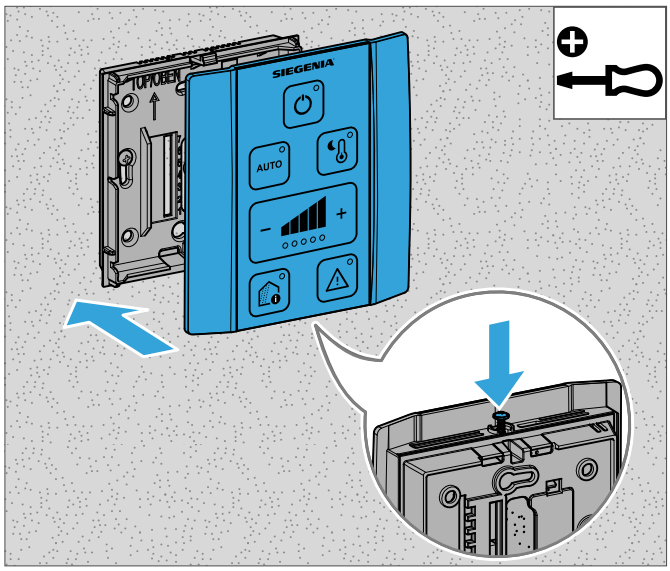

## 4.3 Installing the ventilation control unit on a flush-mounted box

If the ventilation control unit is installed on a flush-mounted box, the screws and dowels supplied are not required. The base plate is fixed using the screws provided with the flush-mounted box. If there are no screws provided with the flush-mounted box, suitable device screws must be used.

1. Loosen the screw and remove the upper part of the device from the base plate.

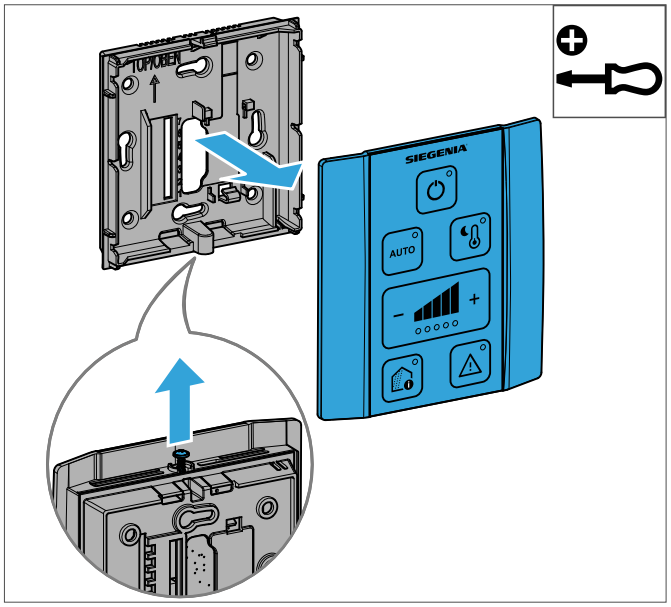


2. If screws are provided with the flush-mounted box, unscrew the screws slightly.
   If there are no screws provided with the flush-mounted box, screw the device screws into the flush-mounted box and leave them protruding slightly.

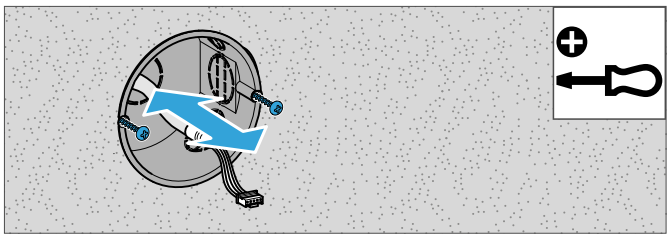

3. Feed the SI BUS cable through the central hole in the base plate.

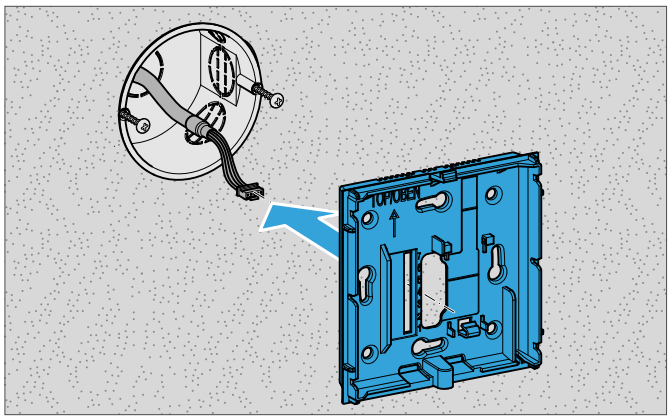


4. Screw the base plate into place.

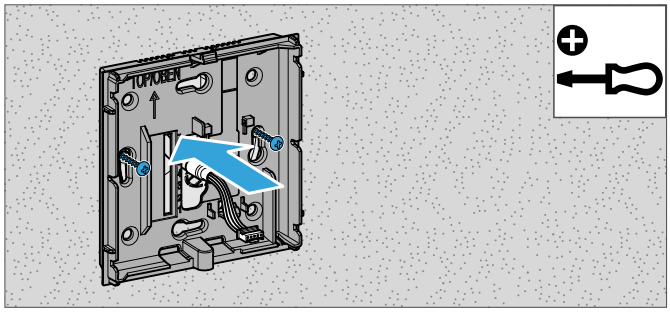


5. Connect the SI BUS cable to the corresponding bushing on the back of the upper part of the device.

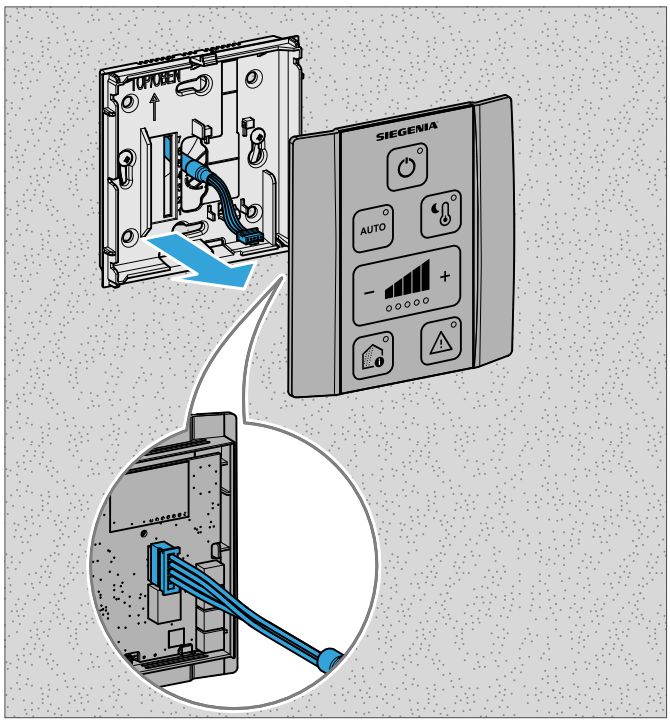

6. Fasten the upper part of the device to the base plate using the screw.

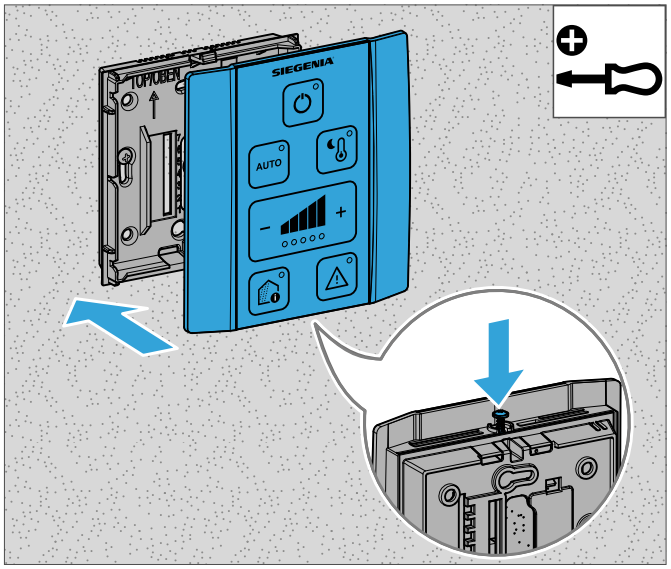

Stand: 05.2024

**www.siegenia.com**

H39.SENS007EN-01

SIEGENIA®
brings spaces to life